L

Mat front

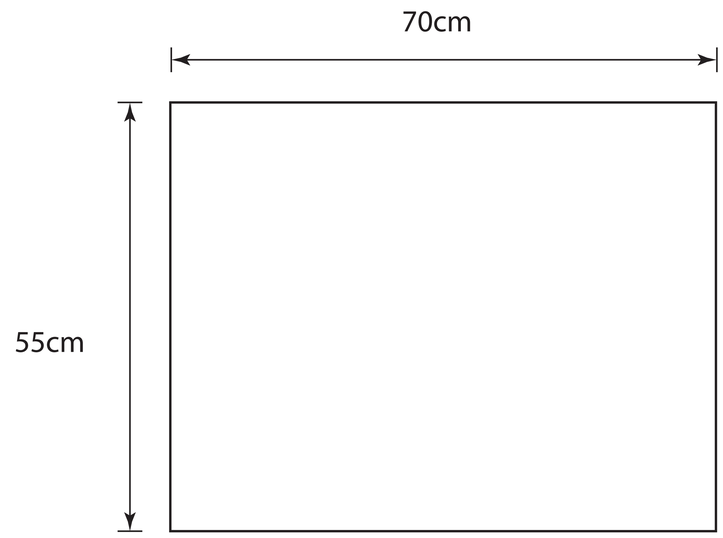

Mat Back

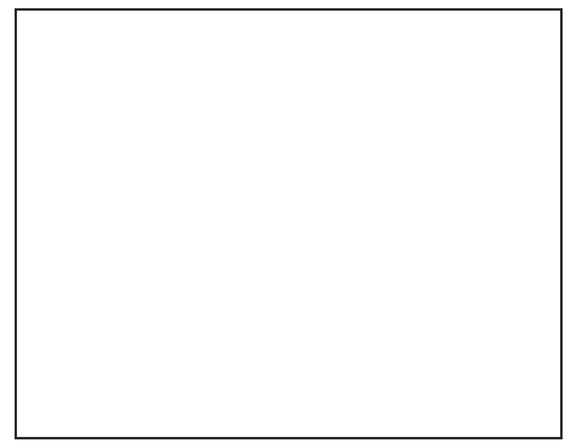

The package of edge

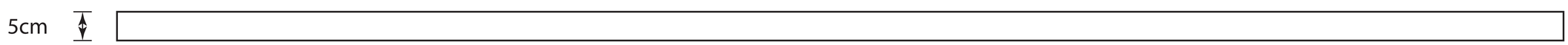

Inside

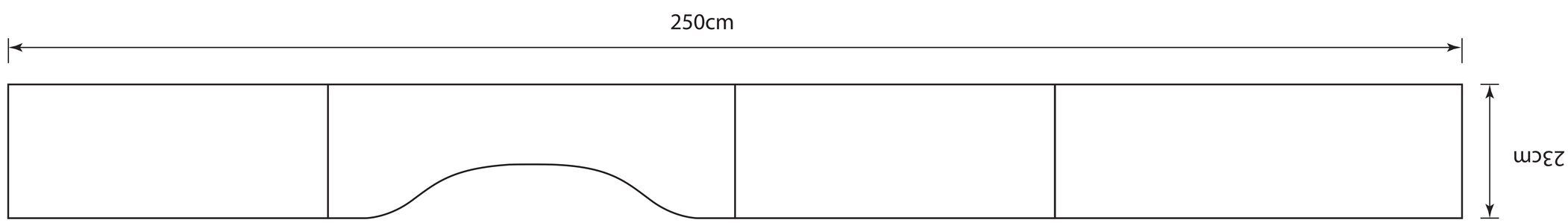

Outside

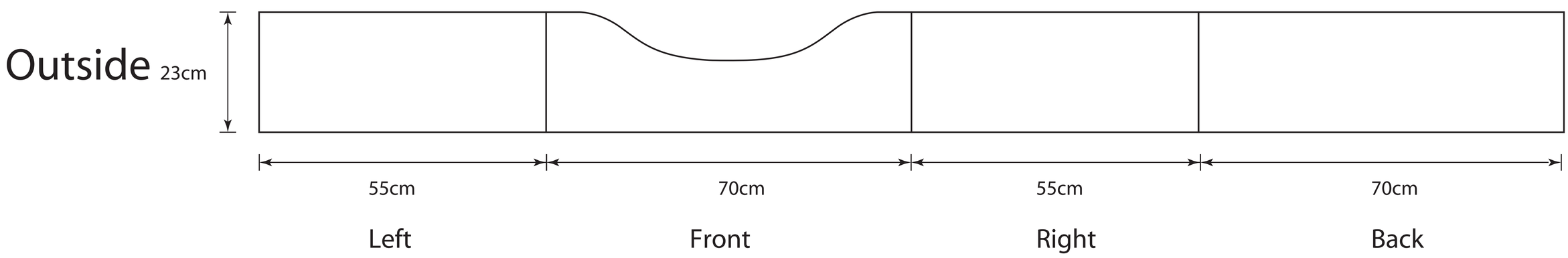
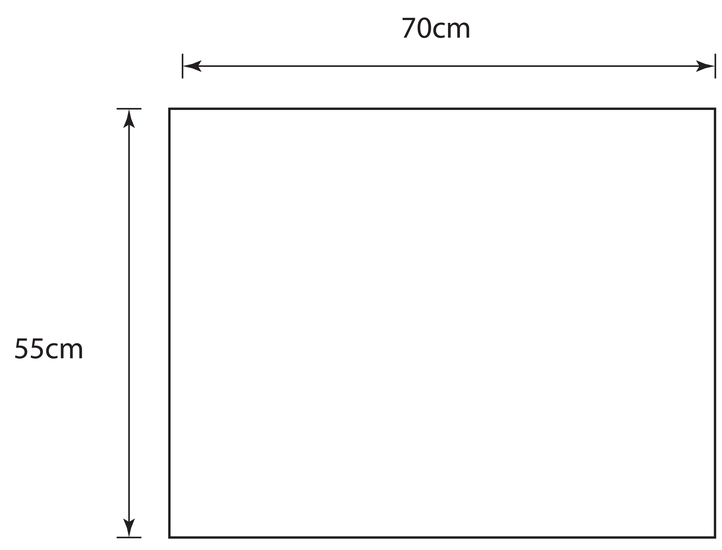
Bottom