S

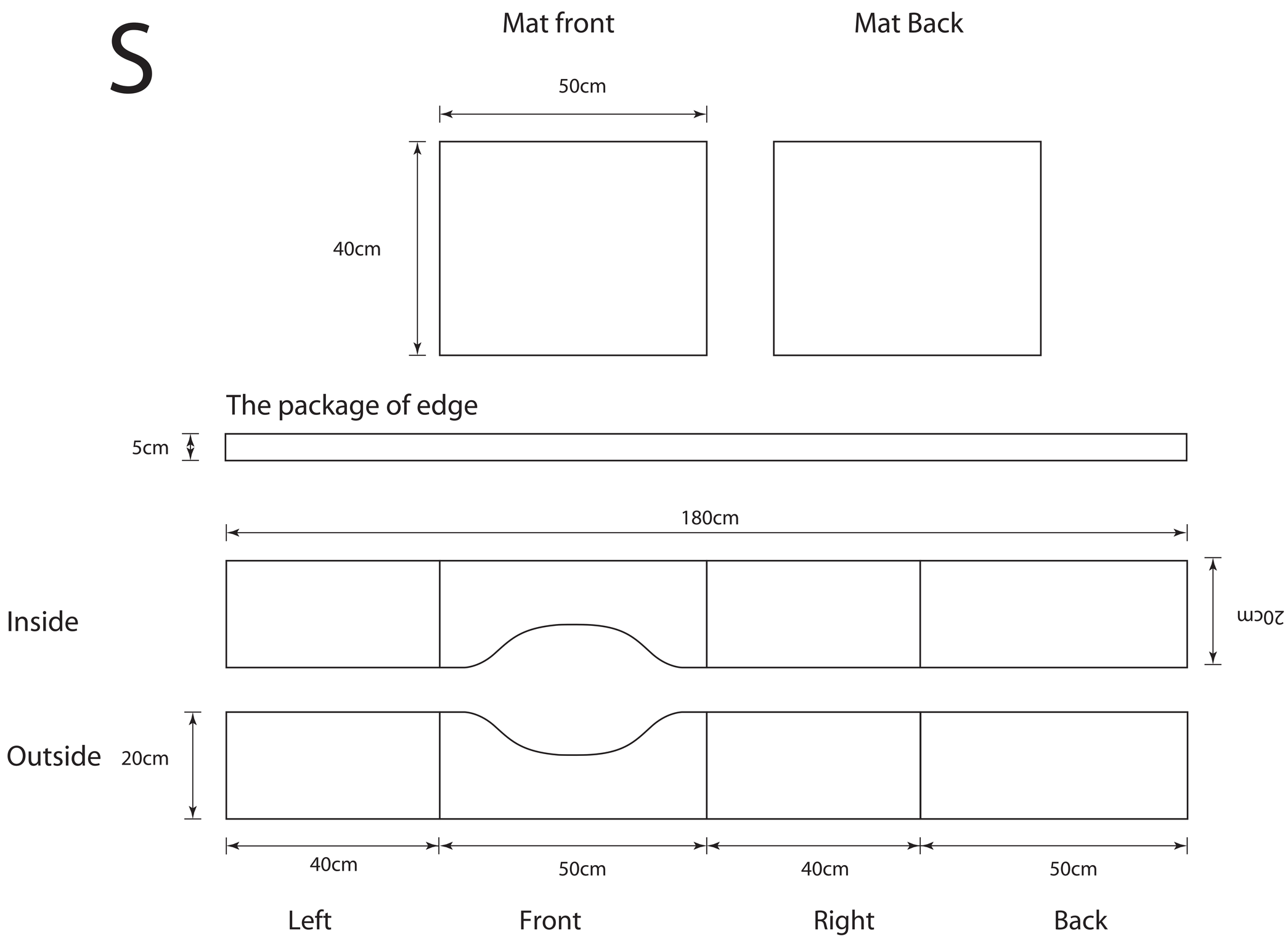
Mat front
Mat Back
50cm
40cm
The package of edge
5cm
180cm
Inside
20cm
Outside
20cm
40cm
50cm
40cm
50cm
Left
Front
Right
Back

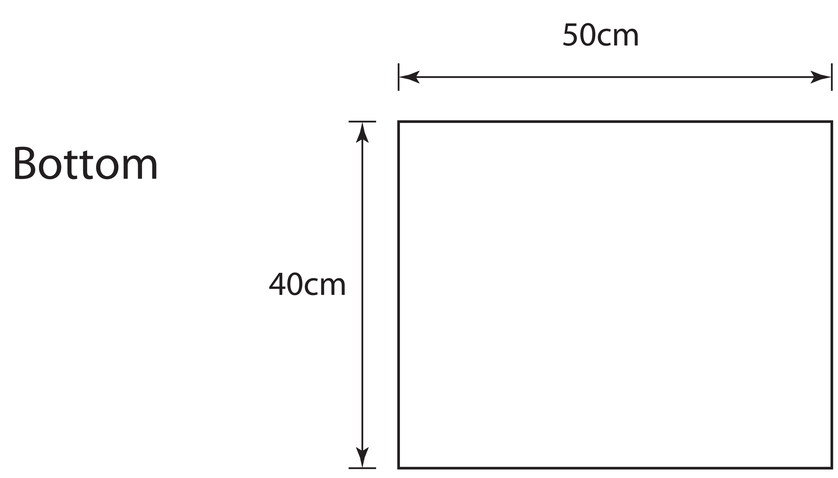
Bottom
50cm
40cm