XL: 36.31"*36.31"+(28.74"*26.10")*4sides
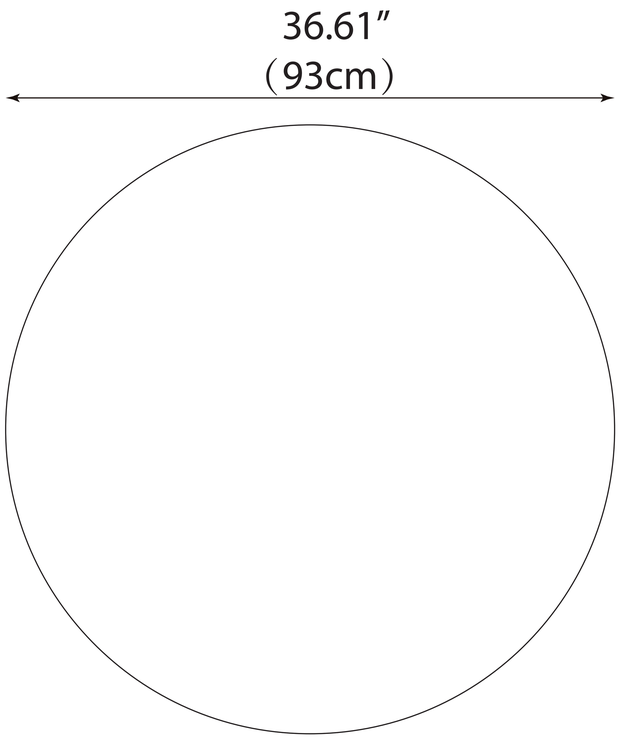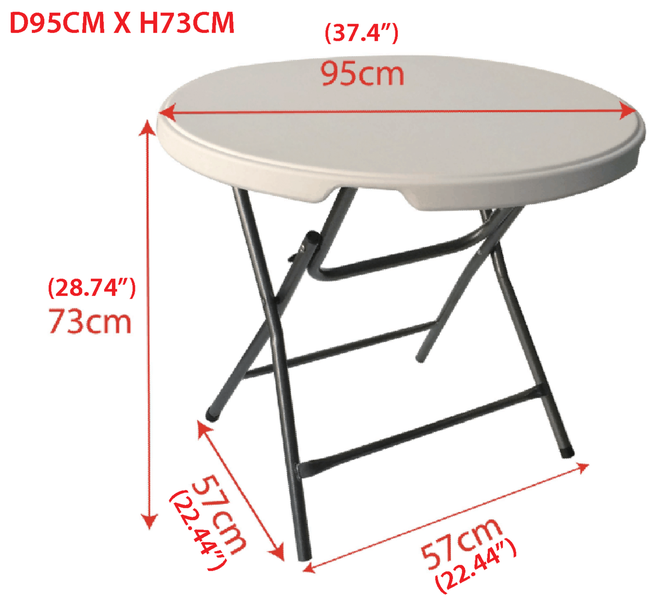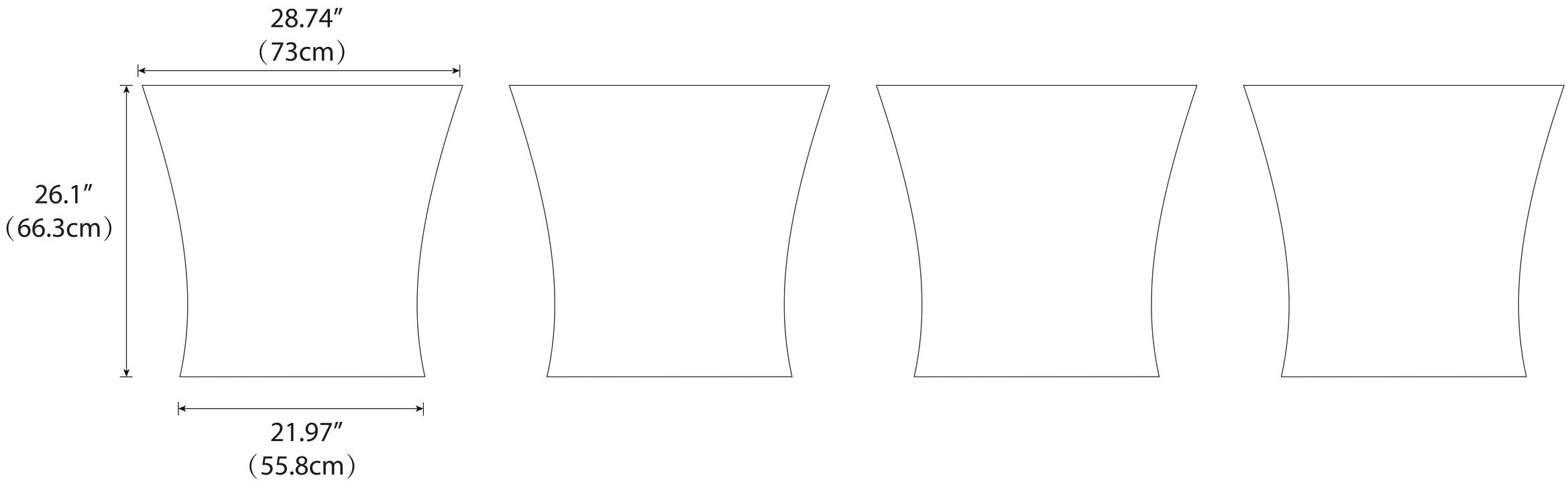
240g
95x73-XL
95x73+57x57cm