400cm

Front

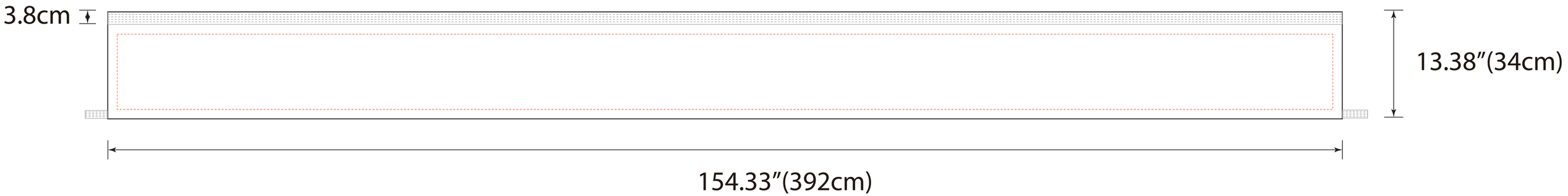
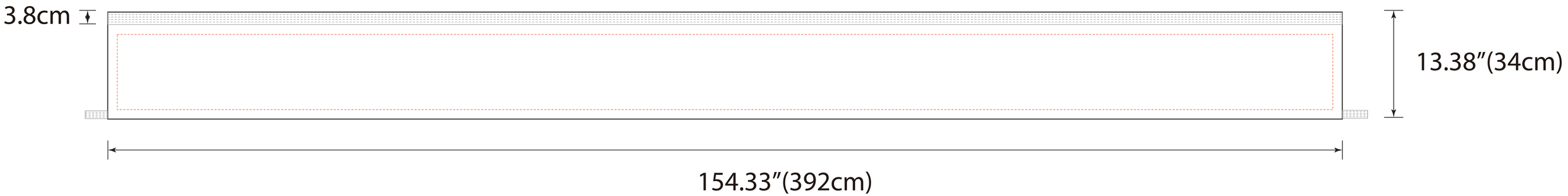
Back