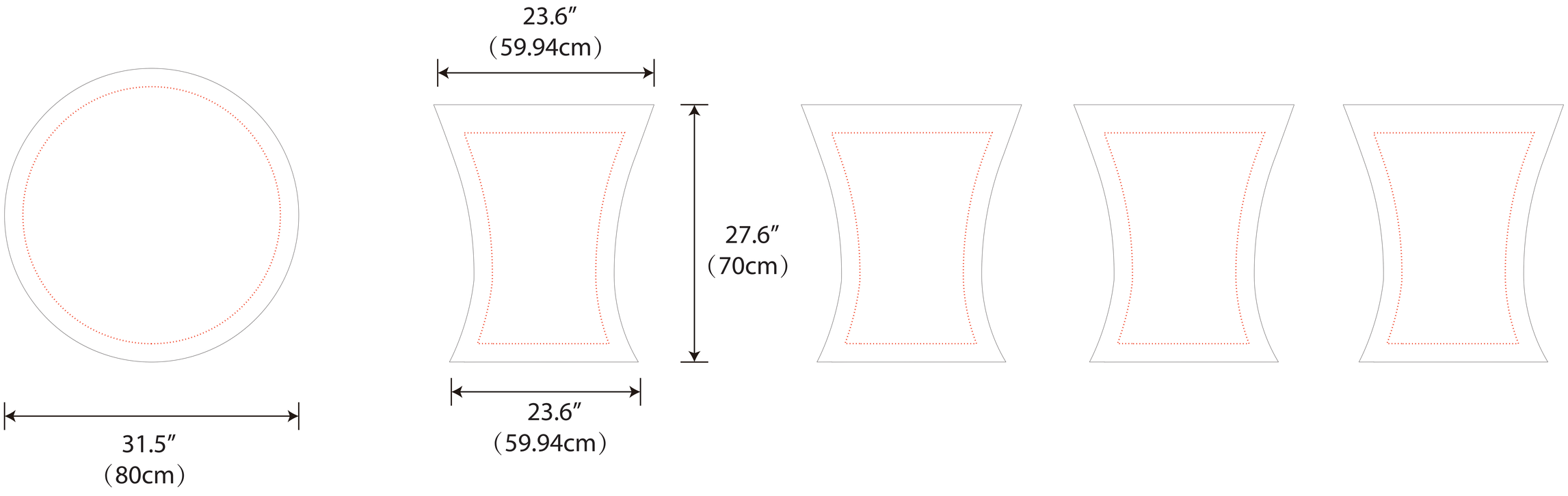
23.6″
(59.94cm)
27.6″
(70cm)
23.6″
(59.94cm)
31.5″
(80cm)