S

Front

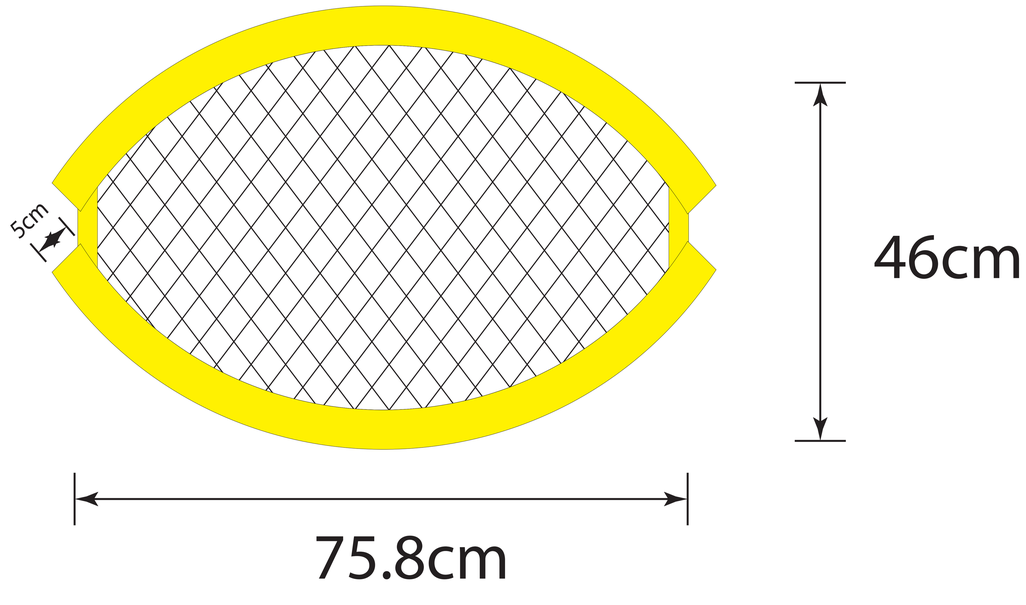

Back

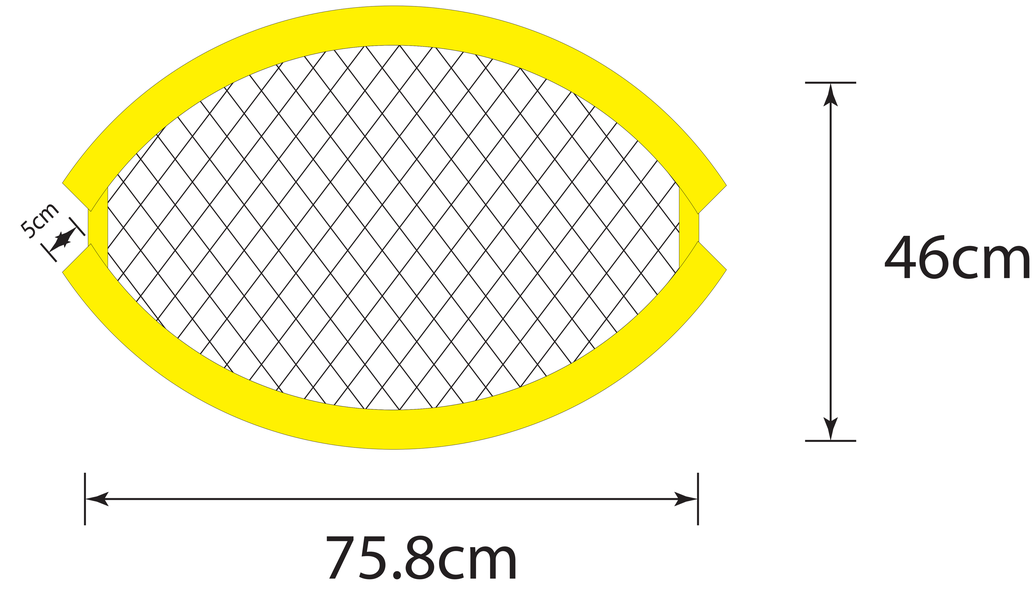

Carrying Pouch

S

Front

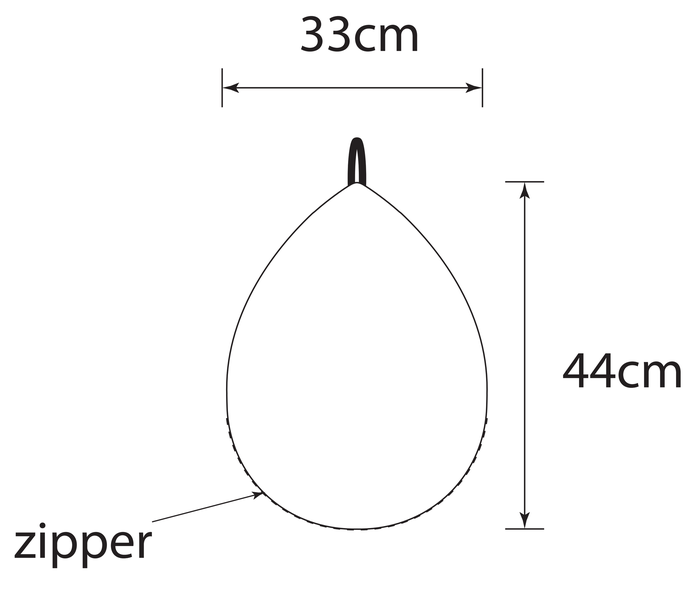
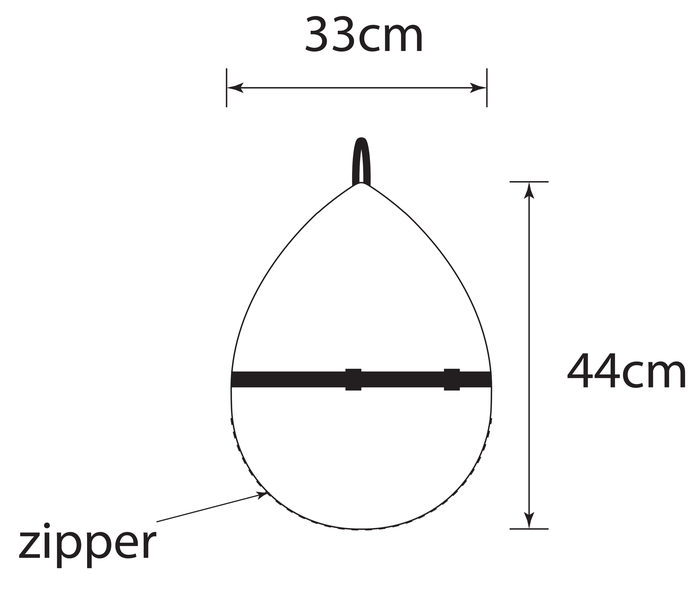
Back