M

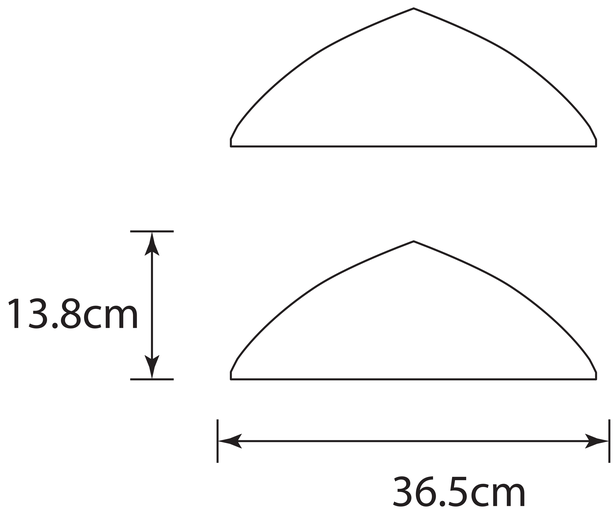

Front

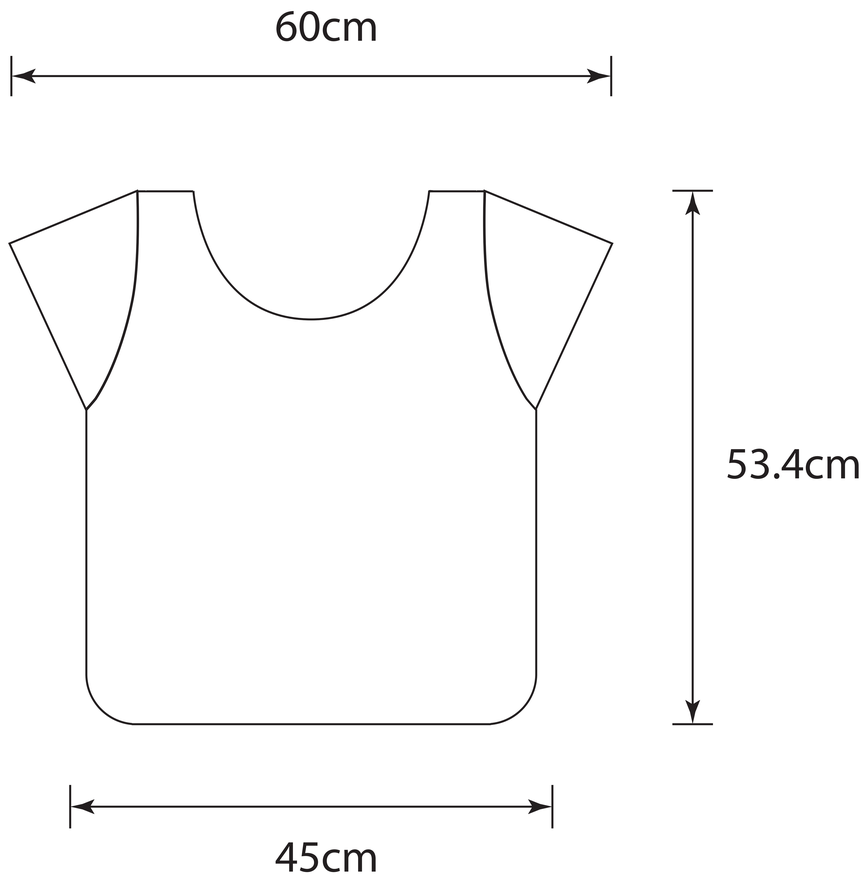
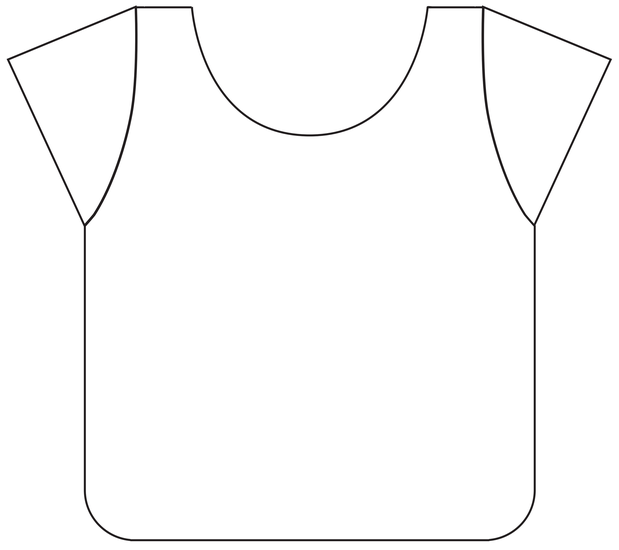
Back