Child-15″x20″

S

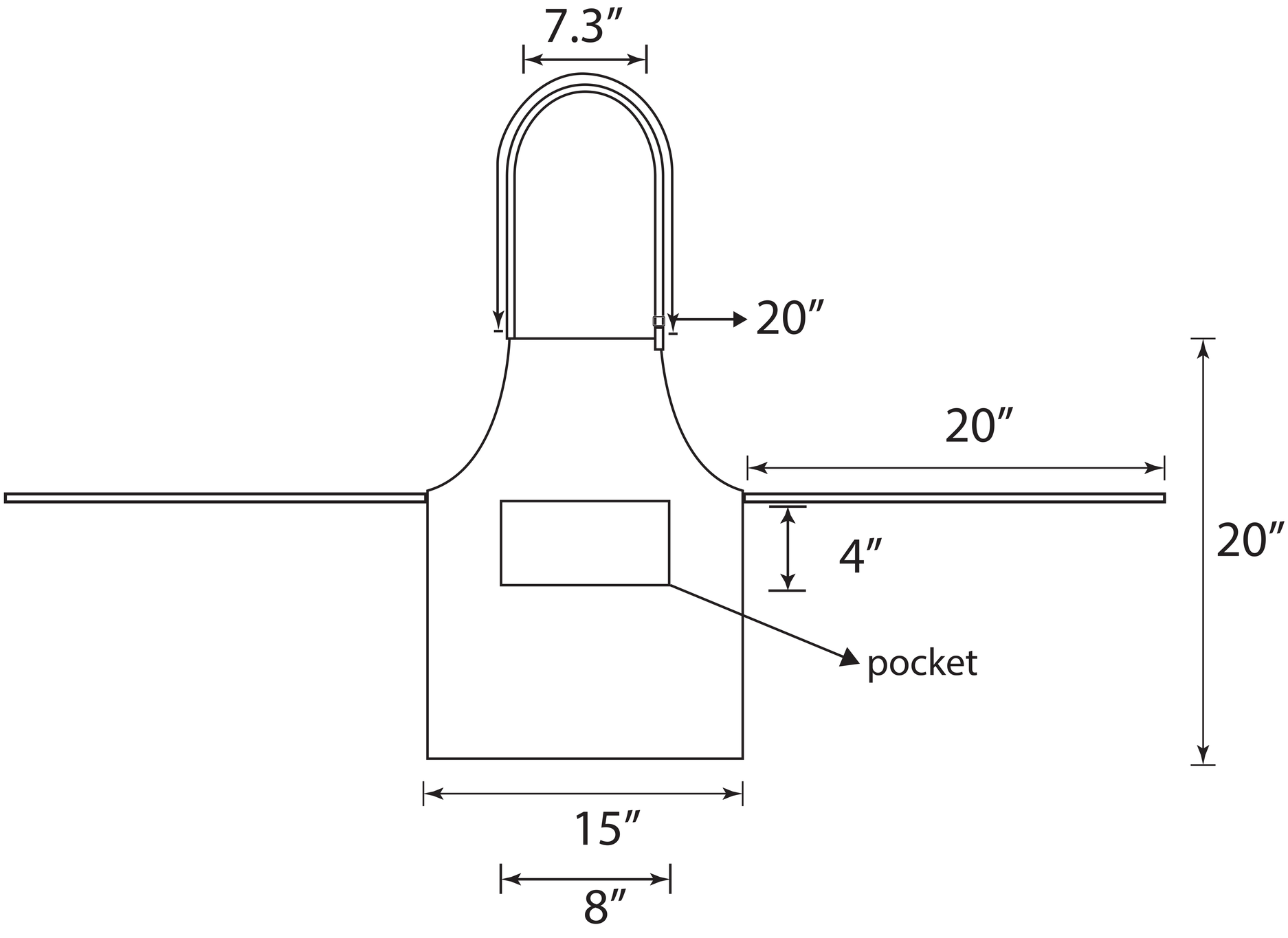

Front

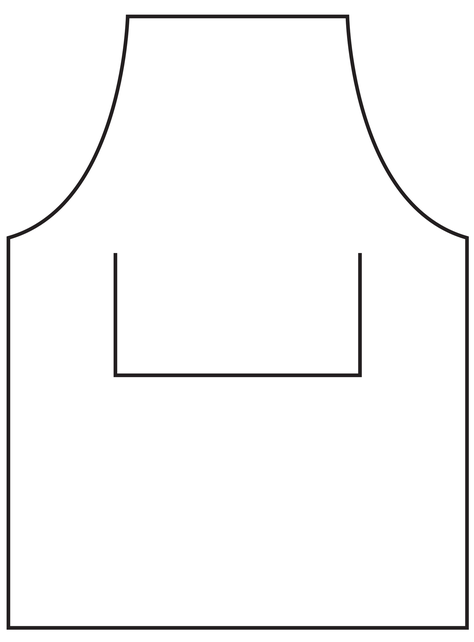

Back

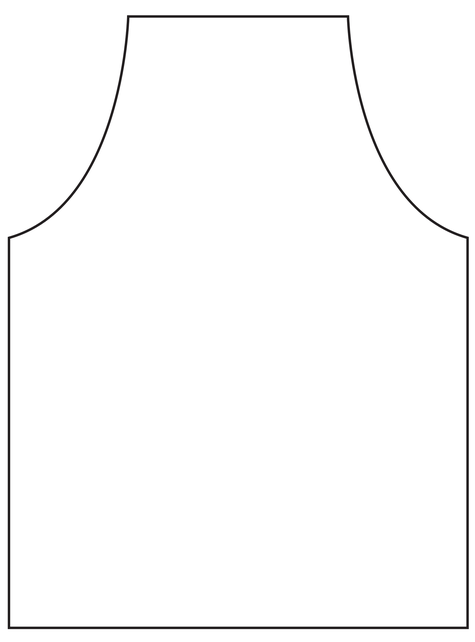

Pocket

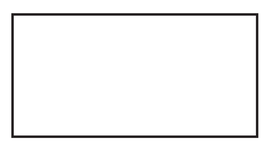
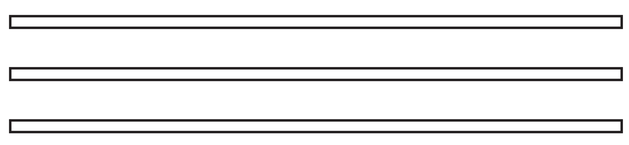
Bind