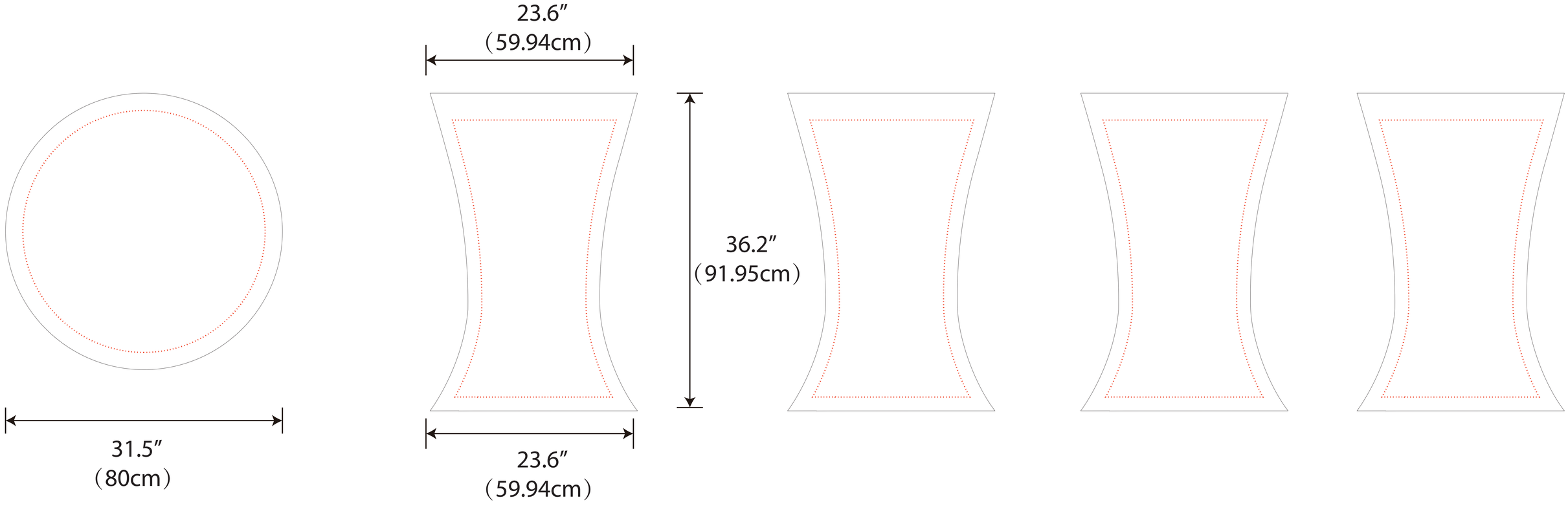
23.6″
(59.94cm)
36.2″
(91.95cm)
31.5″
(80cm)
23.6″
(59.94cm)