WP01-90CM

Front

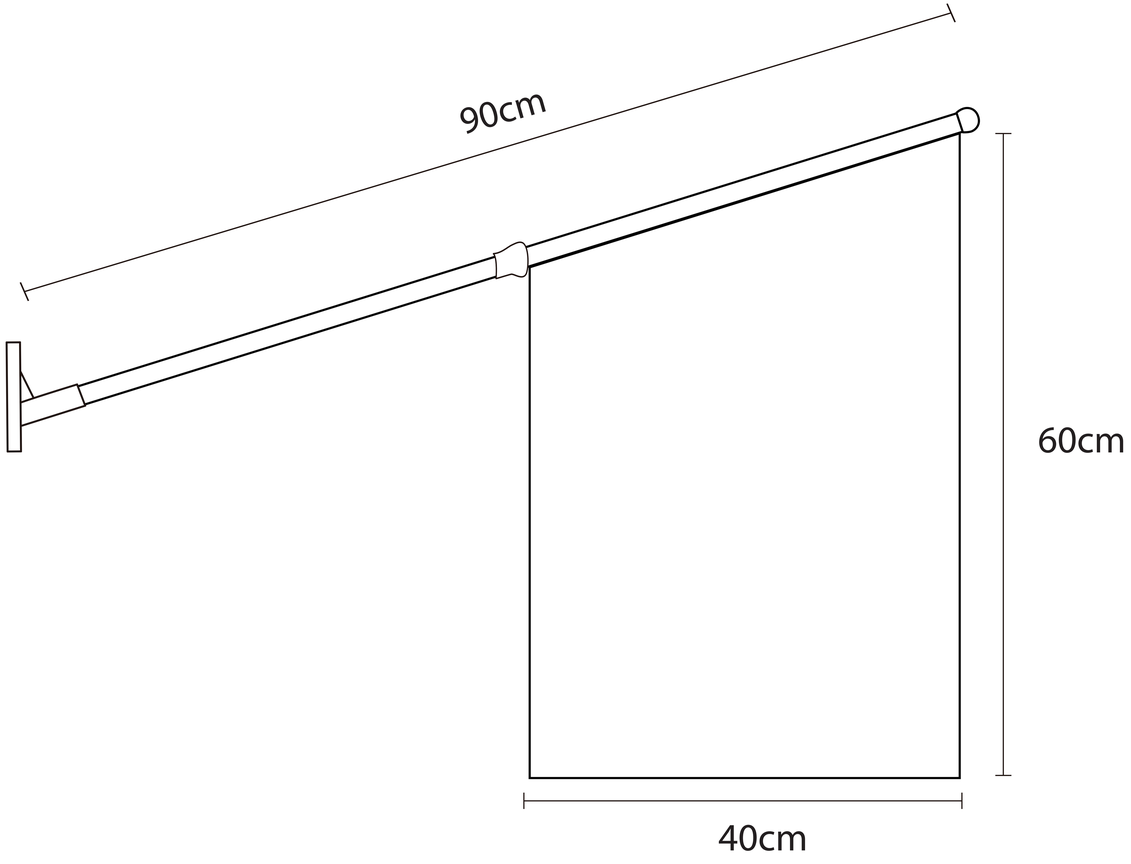
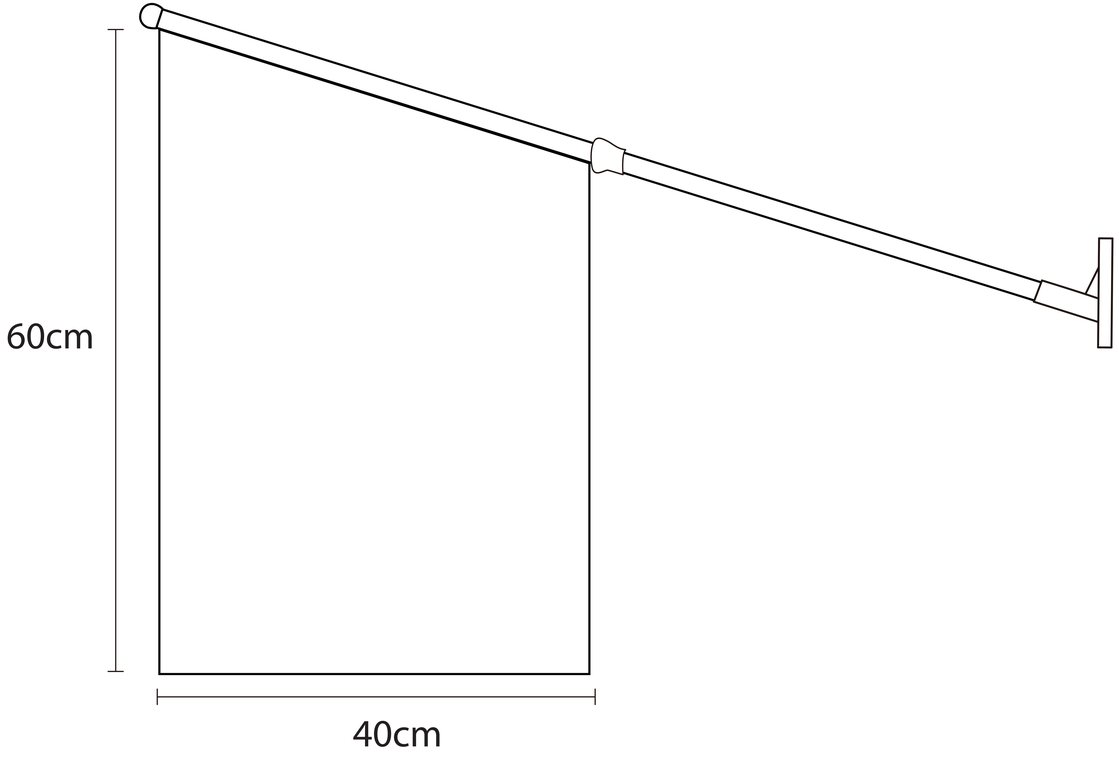
Back