M

Mat front

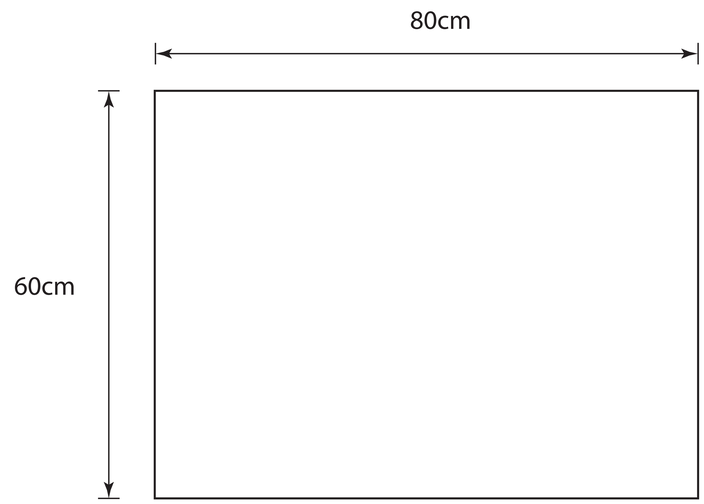

Mat Back

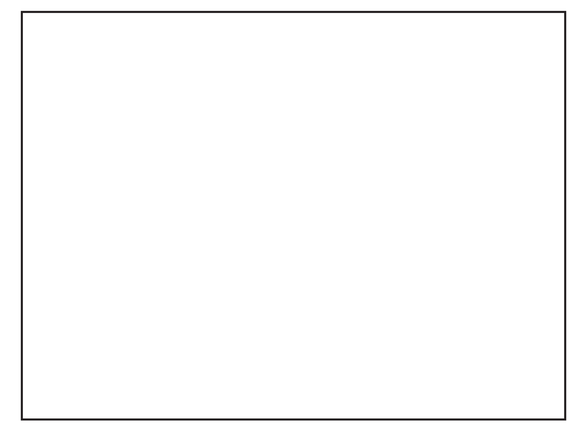

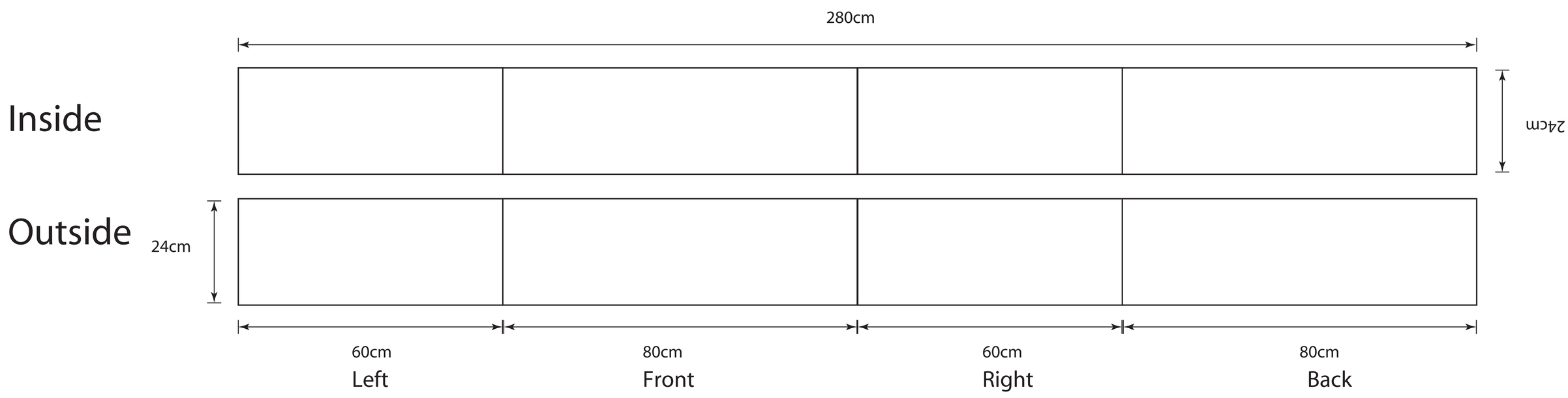
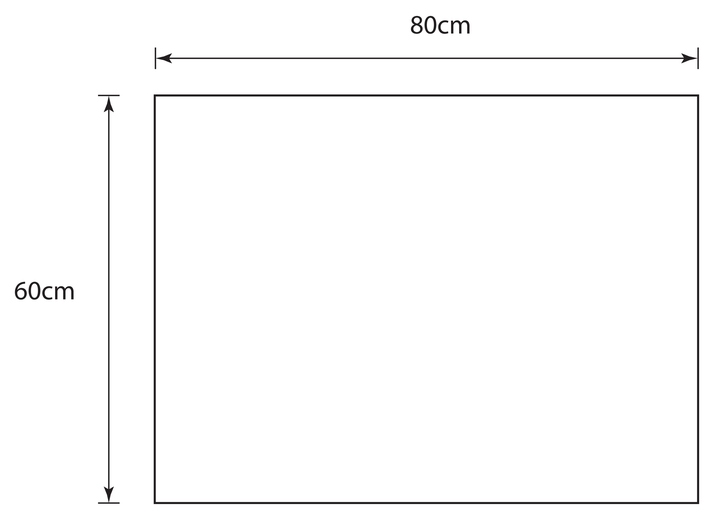
Bottom